TECHNICAL DATA SHEET

CHT-BeauSil™ WAX 040
Modified siloxane as an ingredient for Personal Care.

Description

Silicone waxes are more than an emollient in Personal Care. Silicone waxes are alkyl modified polydimethyl siloxanes that act different than classic silicone fluids in formulations. Outstanding performance is created by the alkyl modification which result in unique physical and chemical properties.

Key Features

- Enhances spreading and solubilizing of natural lipids
- Emollient and Conditioning agent
- Reduces tackiness
- Cleansing effect

Key Applications

- Hair Care
- Skin Care
- Color Cosmetic
- Sun Care

Application

CHT-BeauSil™ WAX 040 is a liquid silicone wax used in personal care applications like sun, skin and hair care formulations or decorative cosmetic. Its surface activity in many organic media enhances the spreading and wetting behaviour of formulations. It creates a pleasant skin feeling combined with improved shine.

Structure of a silicone wax

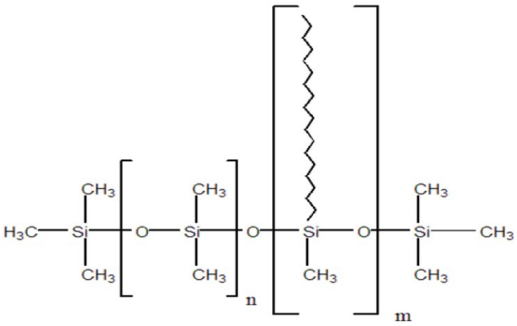

Health & Safety

Safety Data Sheets on request available.

Packaging

Drums. Contact our sales department for more information.

Revision Date	30 Nov 2021
Revision No	3
Download Date	24 Apr 2024

Property	Test Method	Value
Product		
Appearance		**Colourless to yellow liquid**
INCI Name		**Caprylyl methicone**
Ionicity		**Non-ionic**
MIT Free		**Yes**
Non-Volatile Content (%)		**Approx. 100**
Ultralow cyclic content		**Yes**
Viscosity	Brookfield	**<50 cP**
Addition Rates		
Dosage - 1		**0.3 - 5.0% as emollient and reduction of tackiness**
Dosage - 2		**up to 100.0% as solvent**
Solubility		
Solubility - Almond oil		**Soluble**
Solubility - Cetyl Dimethicone		**Soluble**
Solubility - Dimethicone 350cst		**Soluble**
Solubility - Ethanol		**Soluble**
Solubility - Ethylhexylcarbonate		**Soluble**
Solubility - Glycerine		**Insoluble**
Solubility - IPM		**Soluble**
Solubility - Isododecane		**Soluble**
Solubility - Paraffin Oil		**Soluble**
Solubility - Polysorbate-20		**Insoluble**
Solubility - Propylenglycol		**Insoluble**
Solubility - Water		**Insoluble**
Storage		
Max Storage Temperature		**40 °C / 104 °F**
Min Storage Temperature		**4 °C / 39 °F**
Shelf Life		**24 mths**

The content set out in the technical data sheet does not contain information upon which you should rely. It is provided for general information purposes only and does not constitute a product specification. You must obtain professional or specialist advice before taking any action based on the information provided in the technical data sheet.
CHT make reasonable efforts to ensure that information set out in the technical data sheet is complete, accurate, and up-to-date. CHT do not, however, make any representations, warranties or guarantees (whether express or implied) that information set out in the technical data sheet is complete, accurate, or up-to-date or that the product will be suitable for your requirements. You should carry out your own testing to determine the applicability of such information and whether the product will be suitable. CHT reserve the right to modify the technical data sheet at any time. The CHT technical service department is available to offer further information and advice and should it be needed to look at modifying current products or custom formulate a new one to meet your specific requirements. Please contact the technical service department.
CHT Germany GmbH: Postfach 12 80, 72002 Tübingen, Bismarckstraße 102, 72072 Tübingen, Germany
Telephone: 07071/154-0, Fax: 07071/154-290, Email: info@cht.com, Homepage: www.cht.com / www.cht-silicones.com